Technical information
Explosion drawing and parts list

RTE146L Electronic rotary orbital sander (Ref. 4600310)
(*) Parts not mounted in the current version

Pos.	Code	Vrs.	Serie	Item
1	4626154			SPRING
2	1910002			BALL BEARING 608-ZZ
3	2015043			SWITCH
4	2070043			PAN HD. TAPPING SCREW 8X57
5	2079001			SCREW D.4x20 (TX)
6	2079002			SCREW D.4x16 (TX)
7	2404188			BUSHING D.22
8	4302025			CORD CLAMP
9	4424004			WASHER
10	4602376			BLOCKING BUTTON
11	4602378			CANOPY
12	4602380			FAN DEFLECTOR
13	4602385	D0	5550	PUSH BUTTON (V2)
* 13 -	4646374			PUSH BUTTON W/LOCK ASS'Y (V2)
14	4602396			HOUSING
15	4602397			HOUSING COVER
16	4602398			SWITCH LOCKING
17	4606242			DISC
18	4606286			BALANCE WEIGHT (4 mm ORBIT)
19	4610038			BALL BEARING 6002-RS
20	4610039			BALL BEARING 6004-2RS
21	4617037	A1	1878	CARBON BRUSHES SET (110 V)
21 -	4617031			CARBON BRUSHES SET
22	4619276			LABEL
23	4622249			BUSHING
24	4622359			BEARING HOLDER
25	4623248			COVER
26	4626129			SPRING
27	4626130			SPRING
28	4633144			BEARING HOLDER D.42
29	4645010			HARD SANDING PAD
29 -	4645093			HARD SANDING PAD (VELCR0)
29 -	4745040			SOFT SANDING PAD
29 -	4745092			SOFT SANDING PAD (VELCRO)
30	4645382			BRUSHES HOLDER
31	4645384			ELECTRONIC CIRCUIT ASS'Y 230 V.
31 -	4645503			ELECTRONIC CIRCUIT 120 V.
32	4646374			PUSH BUTTON W/LOCK ASS'Y (V2)
33	4645495			CORD ASS'Y (EUROPE)
33 -	4645505			CORD ASS'Y (USA)
34	4650140			WIRING (STATOR-SWITCH)(LONG)
35	4651137			ARMATURE ASS'Y 230 V.
35 -	4651154			ARMATURE ASS'Y 120 V.
36	4655133			STATOR ASS'Y 230 V.
36 -	4655150			STATOR ASS'Y 120 V.
37	4664026			DUST COLLECTION FAN (4 mm ORBIT)
38	4668252			CAPACITOR
39	4673035			SCREW M.8X25
40	4678019			SCREW M.4X16 PH.
41	4679013			SCREW D.4X25 TX
42	4679014			SCREW D.4X10 TX
43	4680057			WASHER D.37X20.2X0.2
44	4691055			PACK 50 SANDING DISCS D150 GR120 VELCRO
45	4699186			DUST RETAINER 275X5X6
46	4699202			RETAINER D27.5XD17X1.5
47	4888018			O-RING
48	7080013			WASHER D.15.2X25X0.1
49	8002043			CORD ARMOR
50	8445208			DUST COLLECTION BAG
51	8625111			HANDLE ASS'Y
52	4699217			LABEL
53	6626085	B0	2210	SPRING
54	4604231	C0	2558	JOINT D.41X2.5 mm
55	4602757	D0	5550	SWITCH LOCKING
56	4626216	D0	5550	SPRING
S/P	4694272			CARTON BOX

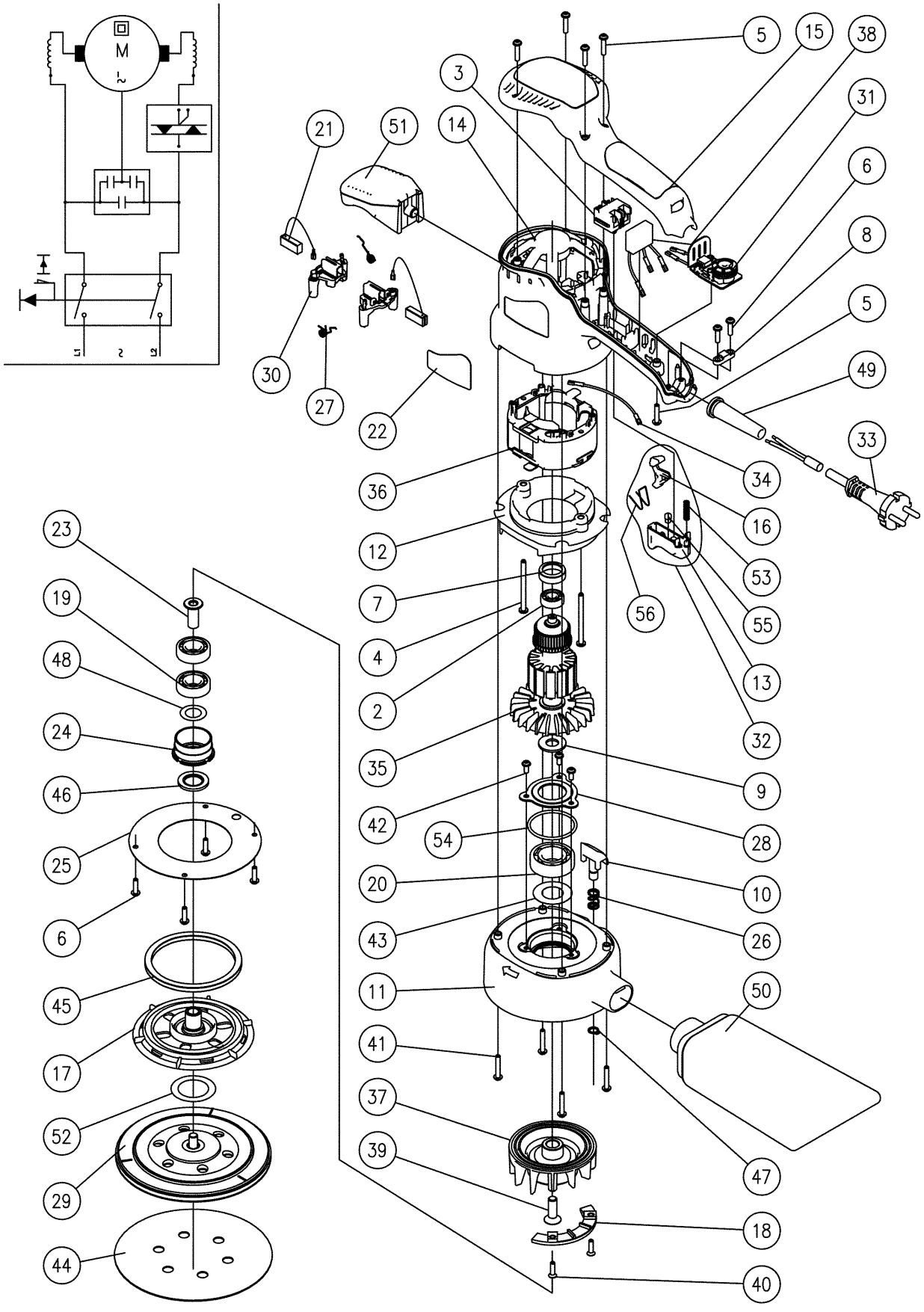
M
~
L1
2
L2
5
15
38
3
31
21
51
14
6
8
5
30
27
22
49
33
36
34
16
12
53
7
55
56
4
13
2
32
35
9
42
28
54
20
10
43
26
11
50
41
37
47
39
18
40
23
19
48
24
46
25
6
45
17
52
29
44

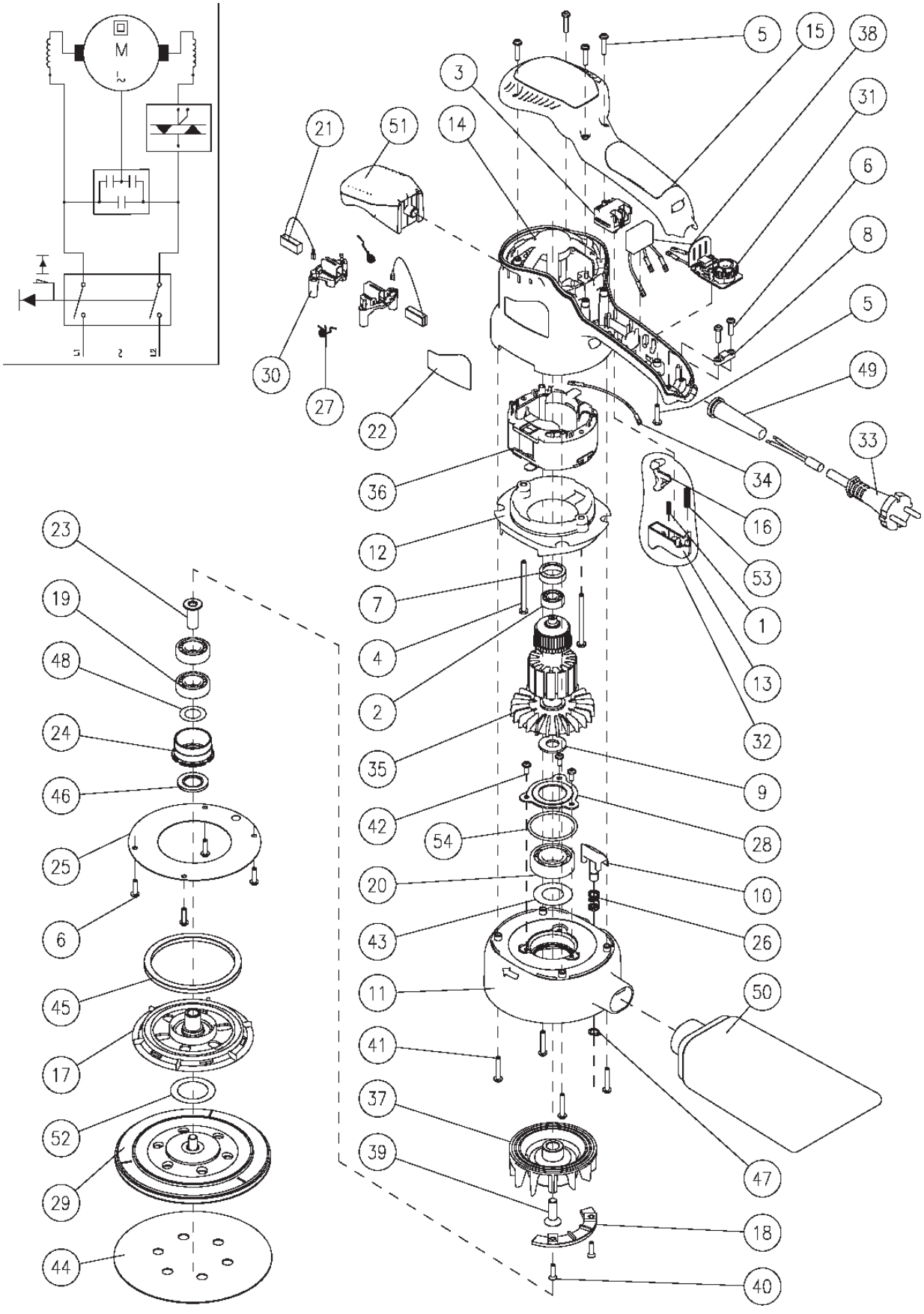
M
5
15
38
3
31
21
51
14
6
8
5
30
27
22
49
33
36
34
16
12
53
23
7
1
19
4
13
48
2
32
24
35
9
46
42
28
54
25
20
10
6
43
26
45
11
50
17
41
37
52
39
47
29
18
44
40

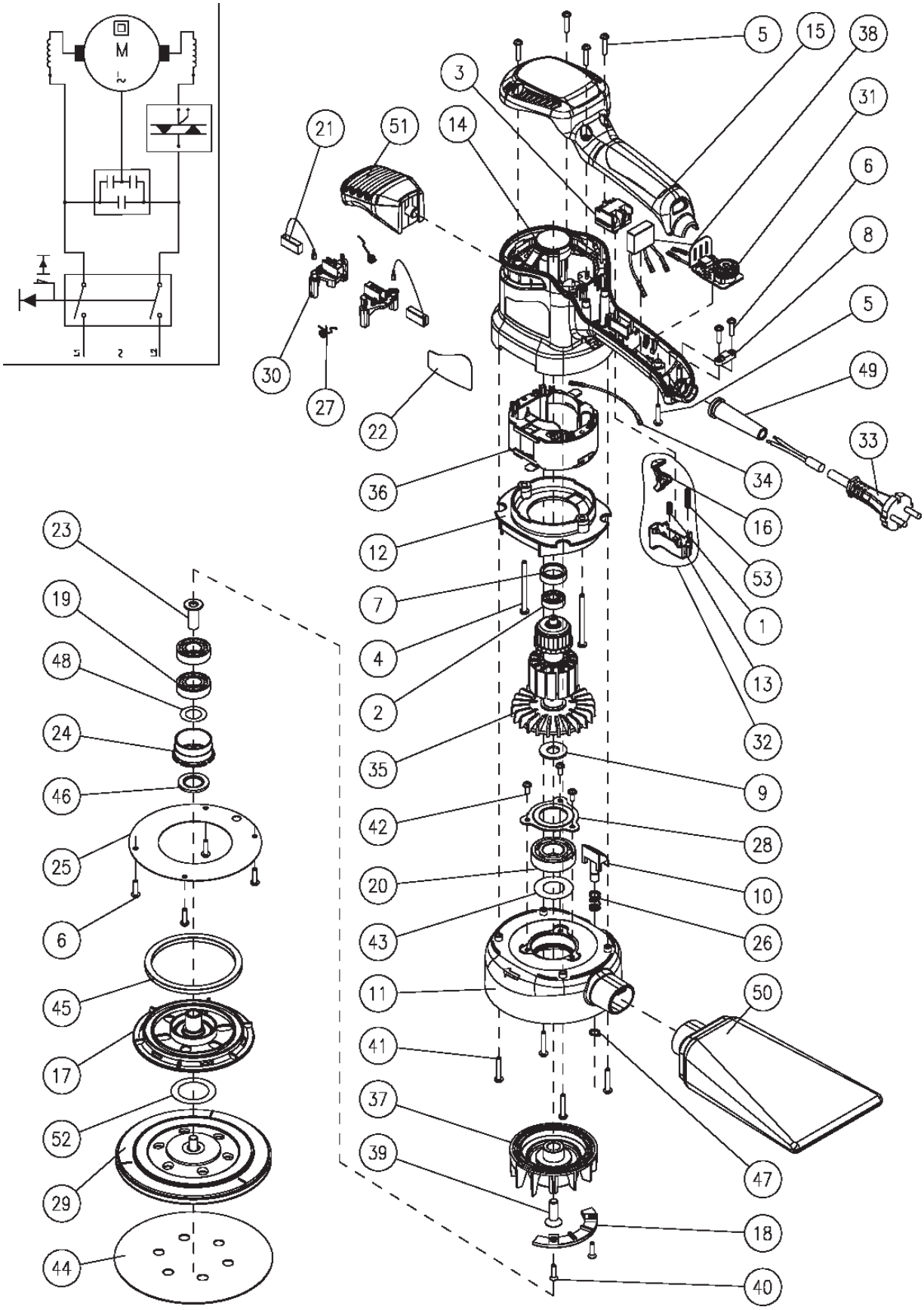
M
~
5
15
38
3
31
21
51
14
6
8
5
30
27
22
49
33
36
34
16
12
53
7
1
4
13
2
32
35
9
42
28
20
10
43
26
11
50
41
47
37
39
18
40
23
19
48
24
46
25
6
45
17
52
29
44

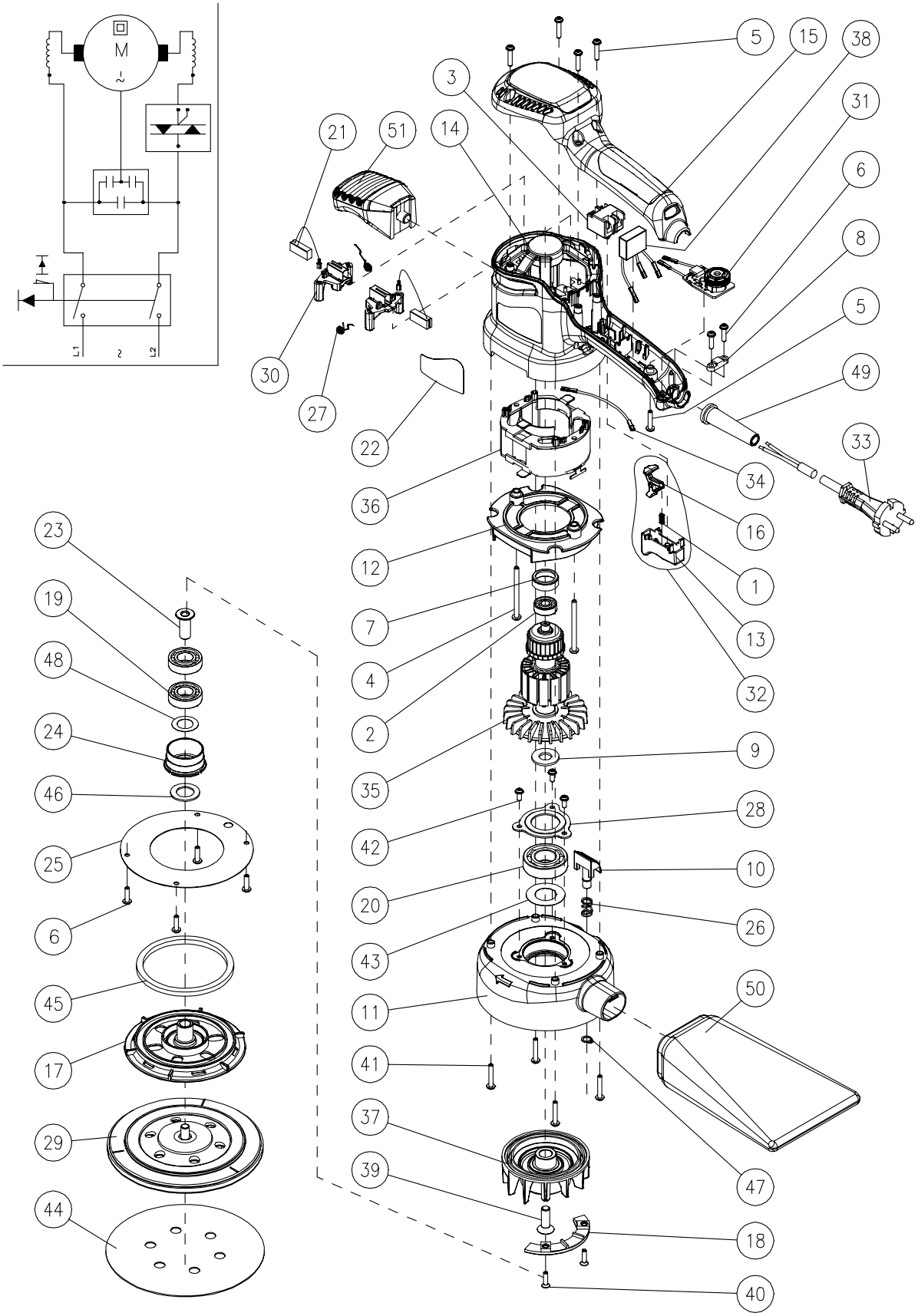
M
~
L1
L2
5
15
38
3
31
21
51
14
6
8
5
30
27
49
22
33
34
36
16
12
1
7
13
4
32
2
9
35
28
42
10
20
26
43
50
11
41
47
37
39
18
40
23
19
48
24
46
25
6
45
17
29
44